ELEVATIONS

Residential Elevator Planning Guide

This elevator meets the requirements of ASME A17.1 Part V, Section 5.3 for a residential elevator.

ROCKY MOUNTAIN
ELEVATOR PRODUCTS
LIVE LIFE ELEVATED

Mission

At Rocky Mountain Elevator Products LLC it is our mission to improve safety and customer experience by providing a superior level of design and innovation. We aspire to create industry-wide change by setting a higher level of excellence and always exceeding customer expectations.

We are a proud member of the American Society of Mechanical Engineers and the Accessibility Equipment Manufacturers Association.

Rocky Mountain Elevator Products is a fellow contractor member of the National Association of Elevator Contractors.

Made in the USA
American Owned and Operated

Introduction

This Planning Guide is to be used as a reference to determine parameters of installation and the steps to achieve a proper elevator installation. This guide may be used by the architect, contractor, dealer or home owner. The information in this guide is intended as an overview. Each installation will have site-specific specifications that must be followed. Do not attempt to construct a hoistway on this information. Before beginning actual construction, be sure you have and follow specific shop drawings engineered to fit your site conditions.

The dimensions and specifications in this planning guide are subject to constant change, without notice, due to product enhancements and continually evolving codes.

Elevator installation is to be done by an authorized elevator contractor, and in accordance with instructions provided by the manufacturer. Installation must also be in compliance with requirements of the National Electric Code, American Society of Mechanical Engineer's safety code, and local building codes. We strongly recommend you contact the code authority in your jurisdiction where the elevator will be installed. Rocky Mountain Elevator's products are designed to meet the requirements of ASME - A17.1 Part V Section 5 for residential elevators. Rocky Mountain Elevator's products, where installed under the proper parameters, are warranted for 3 years. Rocky Mountain Elevator Products assumes no liability for equipment not installed in compliance with these codes.

Advantages

- ✓ More options and features than any other manufacturer.
- ✓ Child safe gate systems.
- ✓ Superior design and innovation.
- ✓ Multiple drive options: machine room-less to save space.
- ✓ Plug and play wiring system for fast installation.
- ✓ Pre-tested components to ensure reliability.
- ✓ Smooth and quiet operation: Smooth Ride technology using the industry's only self-adjusting valve on hydraulic models.
- ✓ On-board LCD screen with self-diagnosis offers easy troubleshooting.
- ✓ Low Maintenance: the elevator is designed for minimal maintenance and the visual service alert and fault codes will tell you when it's time to consider a service inspection.
- ✓ All models have emergency battery lowering and lighting in case of power interruption.
- ✓ Stylish and modern: Our smooth stylish features are timeless and will blend with any décor for years to come. The fixtures feature LED push buttons for that classic elevator feel right in your own home!

Table of Contents

Pre-Planning 5
Hoistway Illustration 6
Drive Systems Overview 8
Standard Car Layouts 9
Hoistway Doors 10
Car Sizes 10
Hoistway Layouts 12
Hoistway Layouts 13
Hoistway Layouts 14
Hoistway Layouts 15
Work by Others 16

Pre-Planning

Locate a local dealer and together plan your elevator. Please use the steps below to guide you in the planning process. Many aspects affect what drive system will best suit your needs: car size, car and shaft door systems, ceiling heights, machine room size and location; all affect what type of drive system you use. This is why Rocky Mountain Elevator Products has a vast offering of drive systems to meet your application needs. Please refer to the Drive System Overview on page 8 and the Drive System Quick Reference below.

Pre-planning considerations

1. Determine what pit depth you can provide.
2. Determine what overhead space you can provide.
3. Determine machine room space and location you can provide.
4. Coordinate with your dealer to go over your options, interior finishes and upgrades.

Drive System	Capacity/ Speed	Pit Depth	Machine Room	Hoistway Ceiling Height (overhead)	Car Door Options	Hoistway Door Options	Power Supply
2:1 roped hydraulic	750-950 lbs. 40 FPM	• 10” for standard car up to 15 sq. ft. • 14” for oversize car up to 18 sq. ft.	Machine Room required, preferred adjacent to shaft, can be up to 25’ remote	• 8’ Standard for 7’ car • 9’ for 8’ car • 9’6” for all cars over 15 sq. ft.	• Accordion Gate • Wrap Around Gate • 2 Speed Side Slide Gate • 3 Speed Side Slide Gate	Swing door 2 Speed Side Slide 3 Speed Side Slide	230V 1Ph 30 Amp
MRL 2:1 roped hydraulic	750-950 lbs. 40 FPM	• 10” for standard car up to 15 sq. ft. • 14” for oversize car up to 18 sq. ft.	No Machine Room - all equipment in shaft	• 8’ Standard for 7’ car • 8’6” for 8’ car • 9’6” for all cars over 15 sq. ft.	• Accordion Gate • Wrap Around Gate • 2 Speed Side Slide Gate • 3 Speed Side Slide Gate	Swing door 2 Speed Side Slide 3 Speed Side Slide	230V 1Ph 30 Amp
Winding Drum	750-950 lbs. 40 FPM	10” for standard car up to 15 sq. ft.	Machine Room required adjacent to rail on bottom floor	• 8’ Standard for 7’ car • 9’ for 8’ car	• Accordion Gate • Wrap Around Gate • 3 Speed Side Slide Gate	Swing door 3 Speed Side Slide	230V 1Ph 30 Amp
MRL Winding Drum	750-950 lbs. 40 FPM	10” for standard car up to 15 sq. ft.	No Machine Room - all equipment in shaft	• 111” for 7’ car • 123” with 8’ car (overhead access required)	• Accordion Gate • Wrap Around Gate • 3 Speed Side Slide Gate	Swing door 3 Speed Side Slide	230V 1Ph 30 Amp

Hoistway Illustration

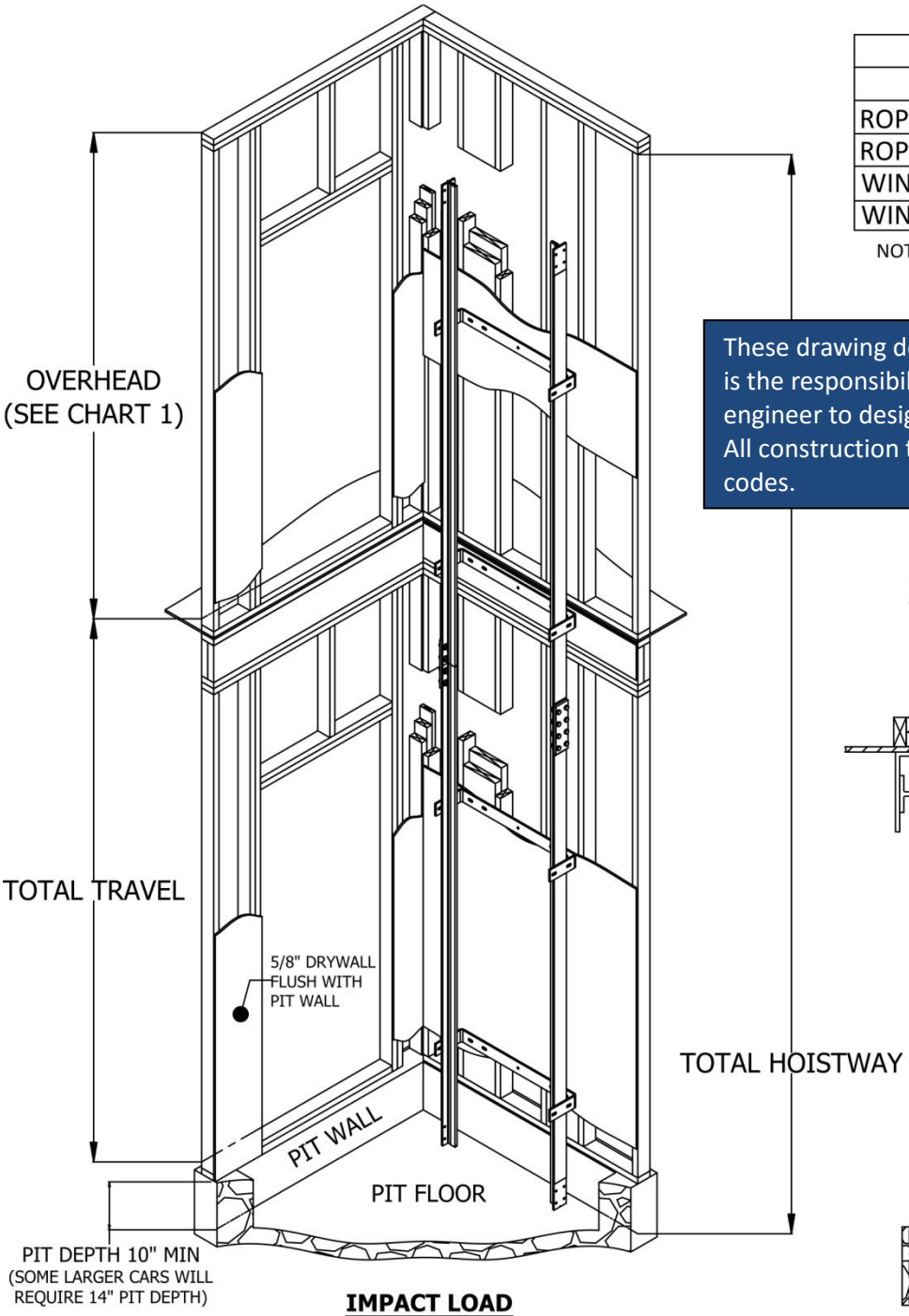

IMPACT LOAD
2900 Lbs. STATIC
4700 Lbs. IMPACT

CHART 1: OVERHEAD		
	7' CAR	8' CAR
ROPED HYDRO.	8'	9'
ROPED HYDRO. MRL	8'	9'
WINDING DRUM	8'	9'
WINDING DRUM MRL	8'-2"	10'-3"

NOTE: POWER GATE OPERATORS REQUIRE AN ADDITIONAL 10" OF OVERHEAD

These drawing depict sample construction only. It is the responsibility of the installer/contractor or engineer to design and specify structural supports. All construction to be in compliance with local codes.

RAIL SUPPORT DETAIL

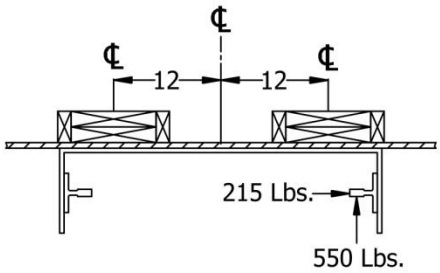

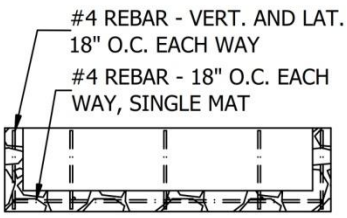

PIT DESIGN

ROCKY MOUNTAIN ELEVATOR PRODUCTS
LIVE LIFE ELEVATED

Machine Room Designs and Controller Space

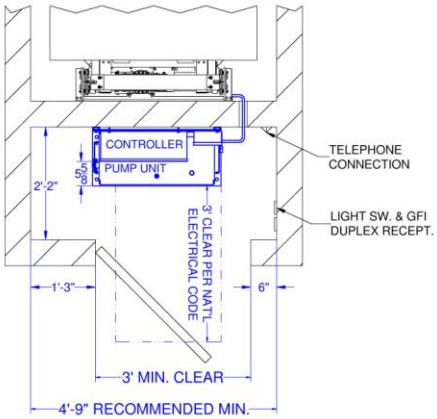

Machine Room - Hydraulic

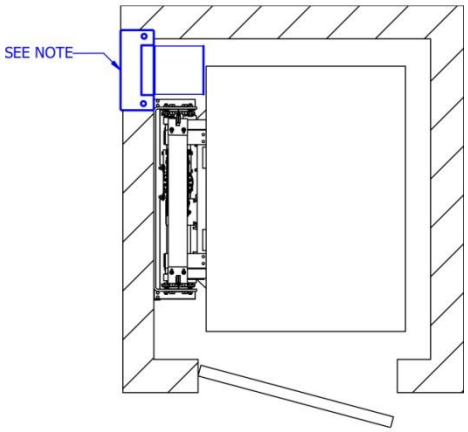

Machine Room Less - Hydraulic

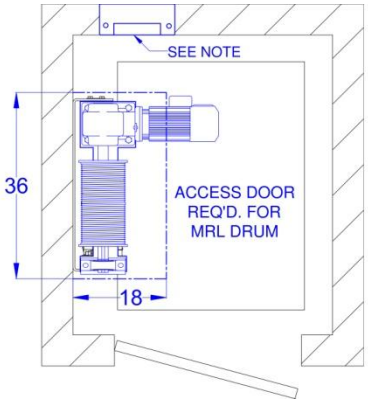

Machine Room Less -Drum

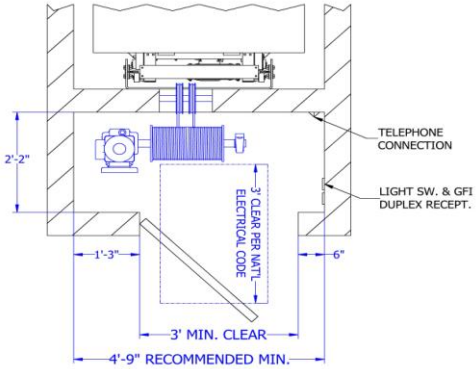

Machine Room - Drum

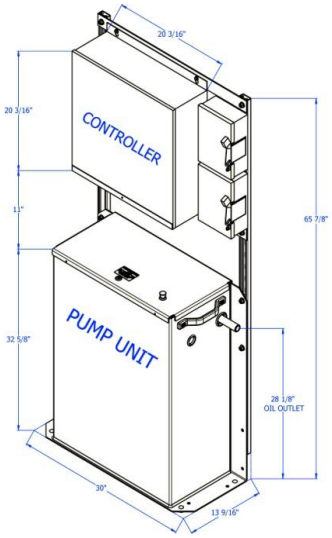

Hydraulic Controller and Pump

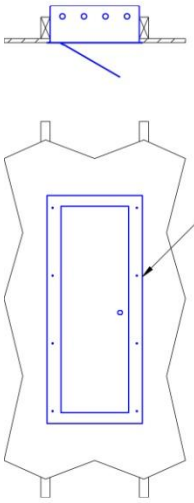

*NOTE:
MRL CONTROLLER RECESSED IN WALL ONE LOCATION AS NOTED, SPACE NEEDED 14.50" WIDE x 36.50" TALL. (IF BEING REMOTELY MOUNTED PLEASE ADVISE US). MAIN LINE POWER 230 V 1 PHASE 30 AMP WITH NEUTRAL AND GROUND. CAR LIGHT 120 VAC 15 AMP. PHONE WIRE BY OTHER TO BE LOCATED AT THE TOP OF CONTROLLER LOCATION.

*Note

ROCKY MOUNTAIN ELEVATOR PRODUCTS
LIVE LIFE ELEVATED

Steps to Planning Your Home Elevator

1. Determine the drive type that best fits your home.
2. Determine the car layout that best fits your design: front opening, front and rear openings, front and side openings.
3. Determine a car gate system: accordion gate, wrap around, 2 speed side slide, 3 speed side slide doors.
4. Determine hoistway door type that best fits your design: swing door, 2 speed side slide, 3 speed side slide.
5. Determine your car size: standard, 36”x48”, 36”x60”, 40”x54”, upgraded size of 42”x60” (requires additional cost and larger equipment space). Custom sizes are available in 1” increments. Layouts for custom applications must be ordered from manufacturer.
6. Select and use the proper shop drawings

Step 1

Drive Systems Overview

Rocky Mountain Elevator Products offers you the choice of two configurations in both the roped hydraulic and winding drum, giving you the flexibility to select the best drive system for your application.

Roped Hydraulic:

- ✓ 2:1 roped hydraulic unit utilizing (2) 3/8” 7x19 wire ropes running over a sheave mounted atop a 70/80/90mm diameter hydraulic cylinder
- ✓ 950 lbs. capacity (750 lbs. optional)
- ✓ Smooth Ride Technology using the industry’s only self-adjusting valve
- ✓ MRLH - Machine Room-less Hydraulic (Figure A) or remote machine room up to 40’ away (Figure B).
- ✓ Submerged motor for quiet operation
- ✓ Floor specific battery descent, standard
- ✓ 40 FPM travel speed (increased speed requires a variance)
- ✓ Slack cable safety device
- ✓ 230 V 1Phase 30 Amp with neutral and ground (4 wires)

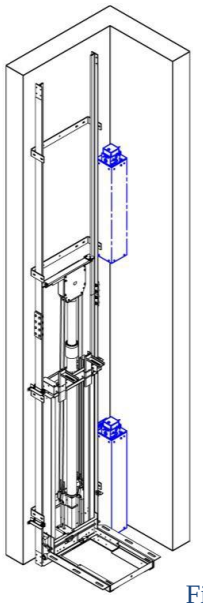

Figure A

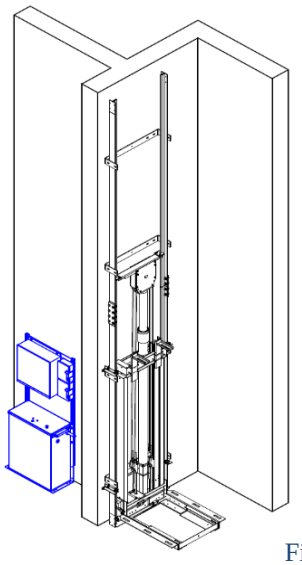

Figure B

Winding Drum:

- ✓ Inverter controlled variable speed winding drum utilizing (2) 3/8” 7X19 steel core wire ropes as suspension means
- ✓ 950 lbs. capacity standard (750 lbs. optional)
- ✓ MRLD – Machine Room-less Drum (requires overhead access) (Figure C)
- ✓ Standard drum behind the rail (Figure D)
- ✓ Variable speed for a quality ride
- ✓ Floor specific battery descent (optional)
- ✓ 40 FPM travel speed
- ✓ 230V 1 Phase 30 Amp with neutral and ground (4 wires)
- ✓ Slack cable safety device

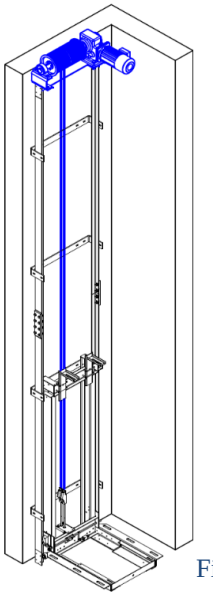

Figure C

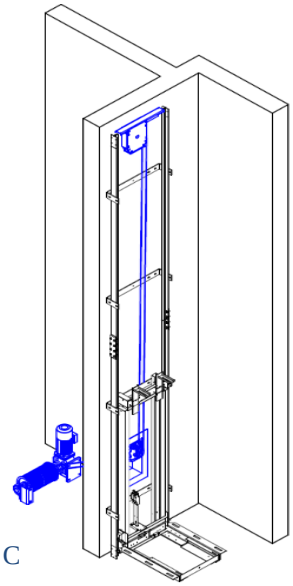

Figure D

Step 2

Standard Car Layouts

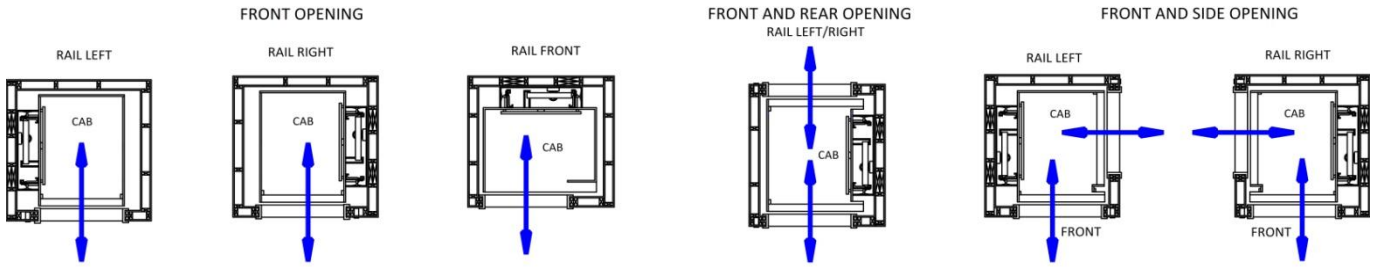

PLEASE READ BEFORE CONSIDERING YOUR GATE STYLE

"Warning! Possible Child Entrapment Condition"

While the accordion gate is widely accepted in our industry and when installed properly using the 3" & 5" rule are code compliant.

RMEP wants you to be informed of this condition and consider the risk to children in making your decision. We recommend installing a supplemental Space Guard safety device when using the accordion gate option.

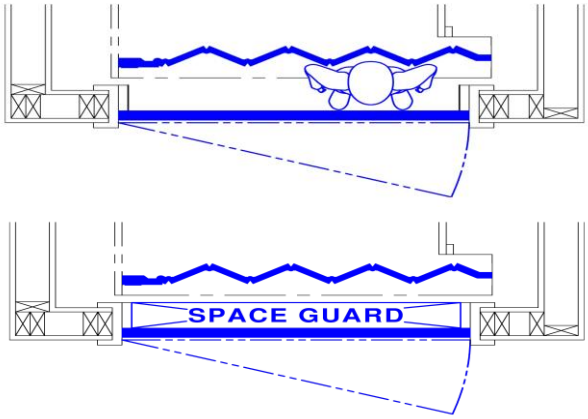

Step 3

Gate Styles

Accordion Gate

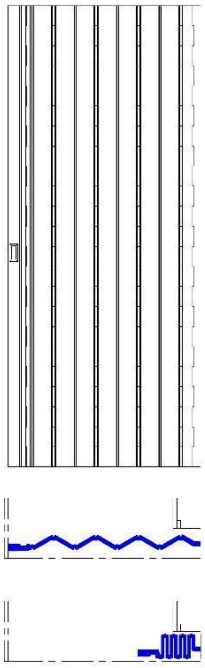

Wrap Around Gate

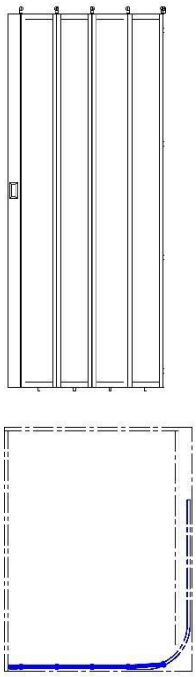

2 Speed Gate

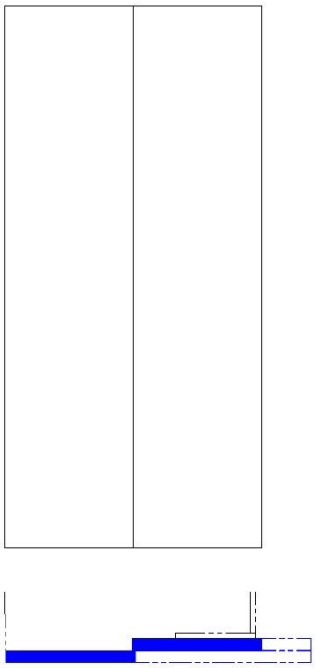

3 Speed Gate

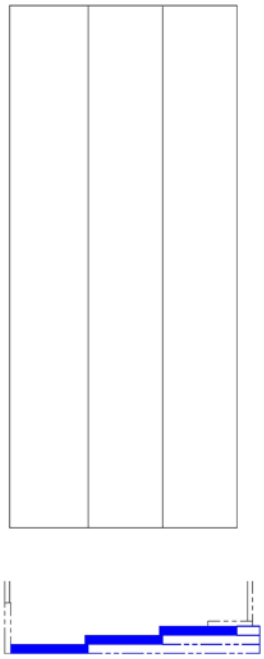

ROCKY MOUNTAIN ELEVATOR PRODUCTS
LIVE LIFE ELEVATED

Step 4

Hoistway Doors

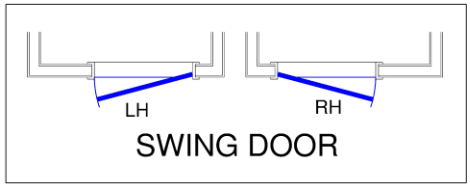

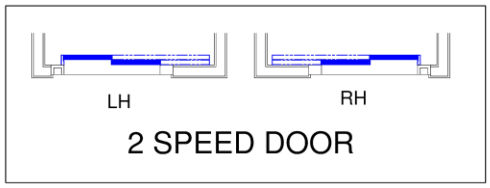

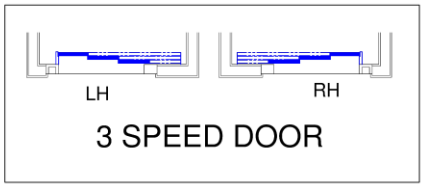

Step 5

Car Sizes

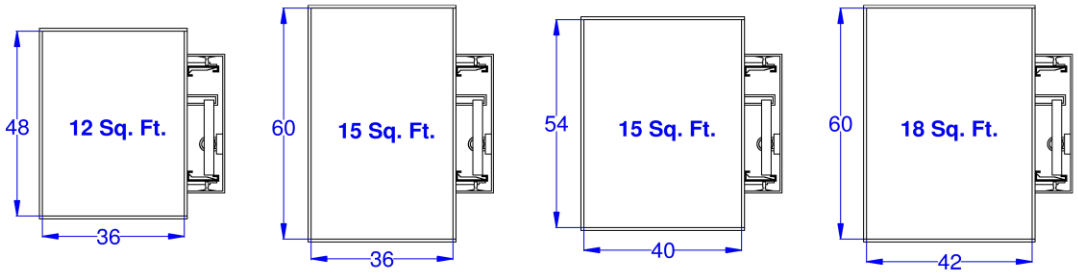

ROCKY MOUNTAIN ELEVATOR PRODUCTS
LIVE LIFE ELEVATED

Step 6

Hoistway Layouts

This symbol is listed beside the car size we believe to be best suited for use by the wheelchair passengers and their accompanying attendant.

SRH-AGP STANDARD LAYOUTS & CAR SIZES WITH ACCORDIAN STYLE GATE

Door Centerlines Represent 36" Swing Doors (Other Widths Available).

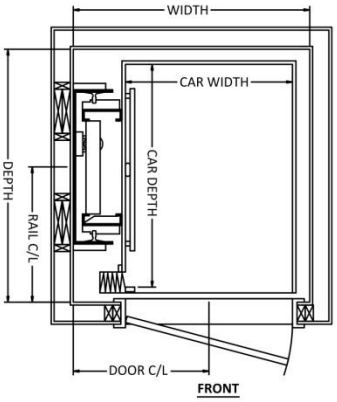

Car Size	Width	Depth	Rail C/L	Door C/L	Clear Front Opening
36x48	51	55	27	29-1/4	34
36x60	51	67	33	29-1/4	34
40x54	55	61	30	33-1/4	34-1/2

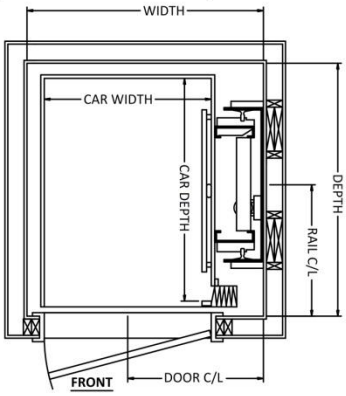

Car Size	Width	Depth	Rail C/L	Door C/L	Clear Front Opening
36x48	51	55	27	29-1/4	34
36x60	51	67	33	29-1/4	34
40x54	55	61	30	33-1/4	34-1/2

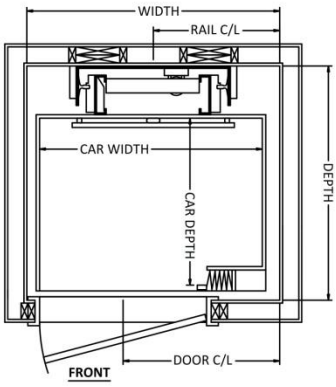

Car Size	Width	Depth	Rail C/L	Door C/L	Clear Front Opening
48x36	55-1/2	51	27-3/4	33-3/4	34
54x40	61-1/2	55	30-3/4	39-3/4	34
60x36	67-1/2	51	33-3/4	45-3/4	34

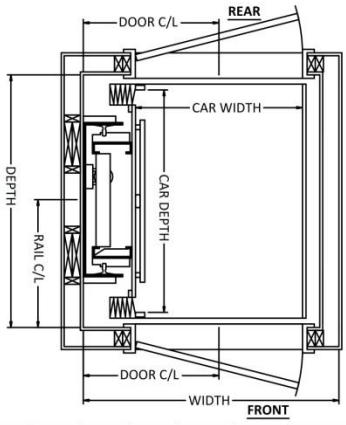

Car Size	Width	Depth	Rail C/L	Front Door C/L	Rear Door C/L	Clear Front Opening	Clear Rear Opening
36x48	51	54-1/2	27-1/4	29-1/4	29-1/4	34	34
36x60	51	66-1/2	33-1/4	29-1/4	29-1/4	34	34
40x54	55	60-1/2	30-1/4	33-1/4	33-1/4	34-1/2	34-1/2

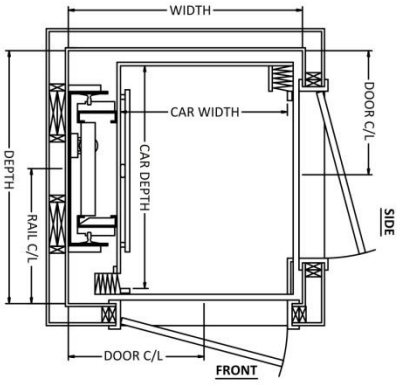

	Width	Depth	Rail C/L	Front Door C/L	Side Door C/L	Clear Front Opening	Clear Side Opening
36x48	51	55	27	29-3/4	27-1/4	32	34
36x60	51	67	33	29-3/4	39-1/4	32	34
40x54	55	61	30	33-3/4	33-1/4	34	34

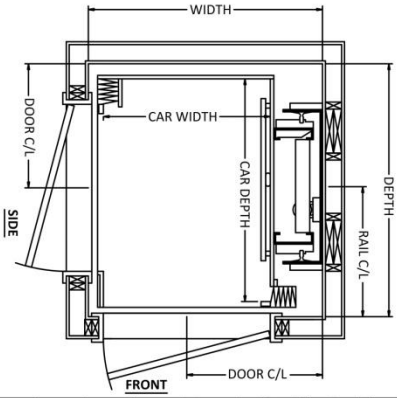

	Width	Depth	Rail C/L	Front Door C/L	Side Door C/L	Clear Front Opening	Clear Side Opening
36x48	51	55	27	29-3/4	27-1/4	32	34
36x60	51	67	33	29-3/4	39-1/4	32	34
40x54	55	61	30	33-3/4	33-1/4	34	34

ROCKY MOUNTAIN ELEVATOR PRODUCTS
LIVE LIFE ELEVATED

Hoistway Layouts

SRH-WG STANDARD LAYOUTS & CAR SIZES WITH WRAP-AROUND STYLE GATE

Door Centerlines Represent 36" Swing Doors (Other Widths Available).

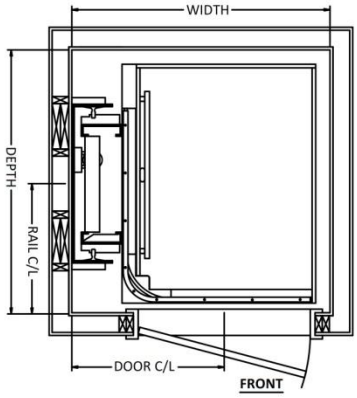

Car Size	Width	Depth	Rail C/L	Door C/L	Clear Front Opening
36x48	54-3/8	55	25-1/4	32-1/4	34
36x60	54-3/8	67	31-1/4	32-1/4	34
40x54	58	61	28-1/4	32-1/4	34

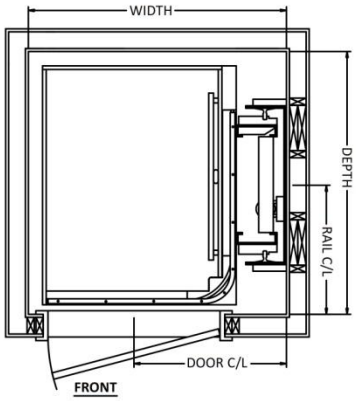

Car Size	Width	Depth	Rail C/L	Door C/L	Clear Front Opening
36x48	54-3/8	55	25-1/4	32-1/4	34
36x60	54-3/8	67	31-1/4	32-1/4	34
40x54	58	61	28-1/4	32-1/4	34

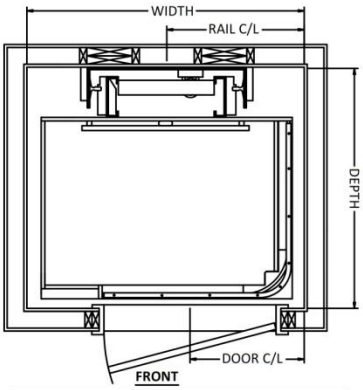

Car Size	Width	Depth	Rail C/L	Door C/L	Clear Front Opening
48x36	58-1/2	51	27-3/4	24-3/4	34
54x40	64-1/2	55	30-3/4	24-3/4	34
60x36	70-1/2	51	33-3/4	24-3/4	34

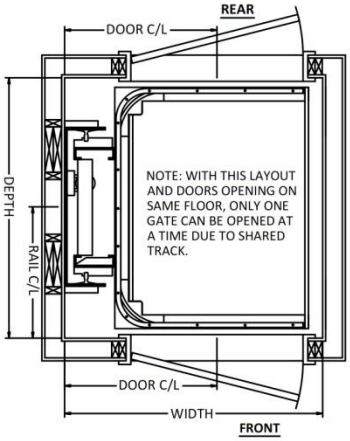

Car Size	Width	Depth	Rail C/L	Front Door C/L	Rear Door C/L	Clear Front Opening	Clear Rear Opening
36x48	54-3/8	54-1/2	27-1/4	32-1/4	32-1/4	34	34
36x60	54-3/8	66-1/2	33-1/4	32-1/4	32-1/4	34	34
40x54	58	60-1/2	30-1/4	32-1/4	32-1/4	34	34

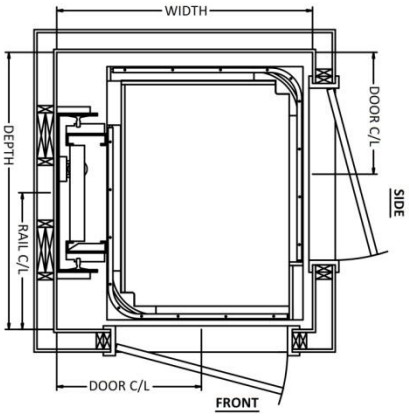

Car Size	Width	Depth	Rail C/L	Front Door C/L	Side Door C/L	Clear Front Opening	Clear Side Opening
36x48	56	58	27-3/4	32-3/4	24-3/4	34	34
36x60	56	70	33-3/4	32-3/4	24-3/4	34	34
40x54	59-5/8	64	30-3/4	32-3/4	24-3/4	34	34

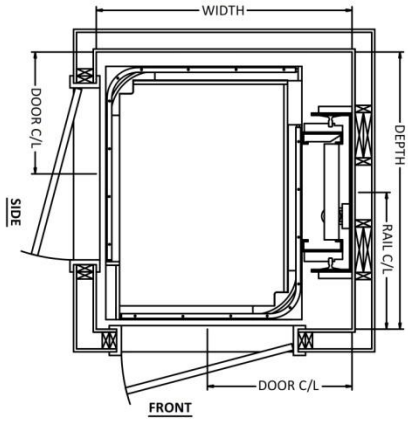

Car Size	Width	Depth	Rail C/L	Front Door C/L	Side Door C/L	Clear Front Opening	Clear Side Opening
36x48	56	58	27-3/4	32-3/4	24-3/4	34	34
36x60	56	70	33-3/4	32-3/4	24-3/4	34	34
40x54	59-5/8	64	30-3/4	32-3/4	24-3/4	34	34

ROCKY MOUNTAIN ELEVATOR PRODUCTS
LIVE LIFE ELEVATED

Hoistway Layouts

SRH-2SPVS STANDARD LAYOUTS & CAR SIZES WITH 2-SPEED CAR & SWING LANDING DOORS

Door Centerlines Represent 36" Swing Doors (Other Widths Available).
These layouts exceed the 15 sq ft code and may require a local variance.

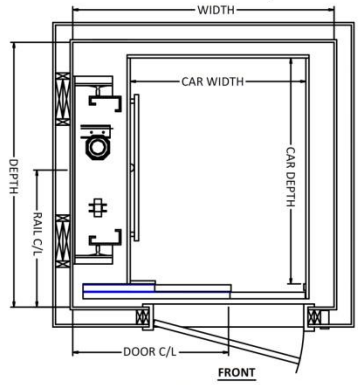

Model Name: SRH-2SPVSL,(SIZE),RL,FRONT,RH
(Left Gate Stack,Rail Left,Front Opening,Right Hand Door)

Car Size	Width	Depth	Rail C/L	Door C/L	Clear Front Opening
42x54	63	63-5/16	30-9/16	38-1/4	35-1/2
42x60	63	69-5/16	33-9/16	38-1/4	35-1/2

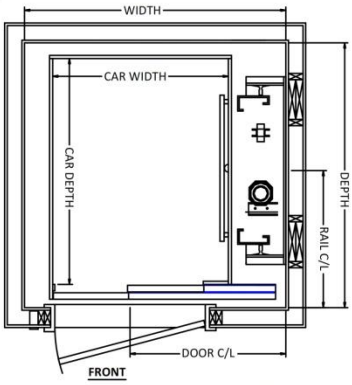

Model Name: SRH-2SPVSR,(SIZE),RR,FRONT,LH
(Right Gate Stack,Rail Right,Front Opening,Left Hand Door)

Car Size	Width	Depth	Rail C/L	Door C/L	Clear Front Opening
42x54	63	63-5/16	30-9/16	38-1/4	35-1/2
42x60	63	69-5/16	33-9/16	38-1/4	35-1/2

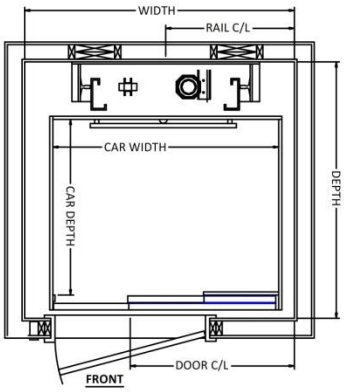

Model Name: SRH-2SPVSR,(SIZE),RF,FRONT,LH
(Right Gate Stack,Rail Front,Front Opening,Left Hand Door)

Car Size	Width	Depth	Rail C/L	Door C/L	Clear Front Opening
54x42	65	61-13/16	30-3/4	40-1/4	35-1/2
60x42	71	61-13/16	33-3/4	46-1/4	35-1/2

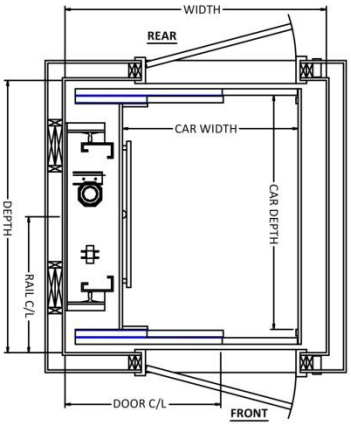

Model Name: SRH-2SPVSLR,(SIZE),RL,FRONT-REAR,RH-LH
(Left Front Gate Stack & Right Rear Gate Stack,Rail Left,Front & Rear Openings,Front Right Hand Door & Rear Left Hand Door)

Car Size	Width	Depth	Rail C/L	Front Door C/L	Rear Door C/L	Clear Front Opening	Clear Rear Opening
42x54	63	65-1/8	32-9/16	38-1/4	38-1/4	35-1/2	35-1/2
42x60	63	71-1/8	35-9/16	38-1/4	38-1/4	35-1/2	35-1/2

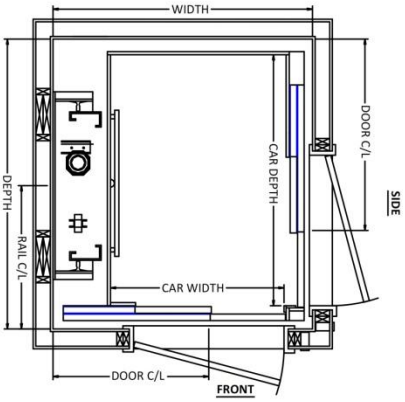

Model Name: SRH-2SPVSLR,(SIZE),RL,FRONT-SIDE,RH-LH
(Left Front Gate Stack & Right Side Gate Stack,Rail Left,Front & Side Openings,Front Right Hand Door & Side Left Hand Door)

Car Size	Width	Depth	Rail C/L	Front Door C/L	Side Door C/L	Clear Front Opening	Clear Side Opening
42x54	61-13/16	63-1/16	30-5/16	38-3/4	40-1/4	35-1/2	35-1/2
42x60	61-13/16	69-1/16	33-5/16	38-3/4	46-1/4	35-1/2	35-1/2

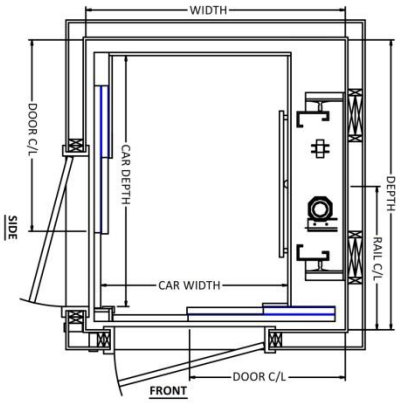

Model Name: SRH-2SPVSRL,(SIZE),RR,FRONT-SIDE,LH-RH
(Right Front Gate Stack & Left Side Gate Stack,Rail Right,Front & Side Openings,Front Left Hand Door & Side Right Hand Door)

Car Size	Width	Depth	Rail C/L	Front Door C/L	Side Door C/L	Clear Front Opening	Clear Side Opening
42x54	61-13/16	63-1/16	30-5/16	38-3/4	40-1/4	35-1/2	35-1/2
42x60	61-13/16	69-1/16	33-5/16	38-3/4	46-1/4	35-1/2	35-1/2

ROCKY MOUNTAIN ELEVATOR PRODUCTS
LIVE LIFE ELEVATED

Hoistway Layouts

SRH-3SPV STANDARD LAYOUTS & CAR SIZES WITH 3-SPEED CAR & LANDING DOORS

Door Centerlines Represent Either 31-1/2" or 35-1/2" Clear Openings, Depending on Model.

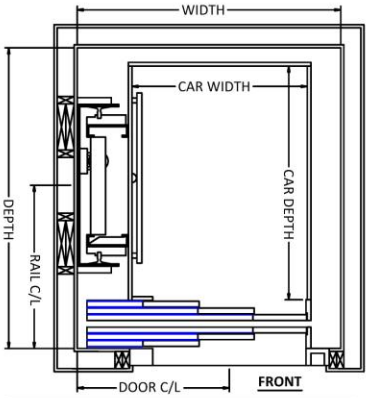

Car Size	Width	Depth	Rail C/L	Door C/L	Clear Front Opening
36x48	54-1/2	61-3/8	31-5/8	31-1/2	31-1/2
36x60	54-1/2	73-3/8	37-5/8	31-1/2	31-1/2
40x54	58-1/2	67-3/8	34-5/8	35-1/2	31-1/2

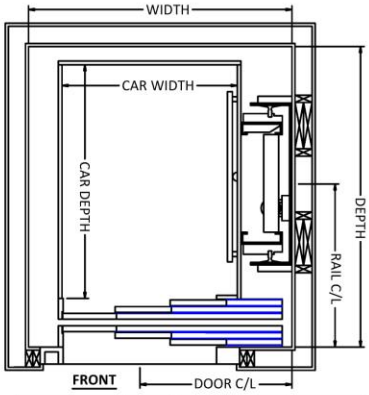

Car Size	Width	Depth	Rail C/L	Door C/L	Clear Front Opening
36x48	54-1/2	61-3/8	31-5/8	31-1/2	31-1/2
36x60	54-1/2	73-3/8	37-5/8	31-1/2	31-1/2
40x54	58-1/2	67-3/8	34-5/8	35-1/2	31-1/2

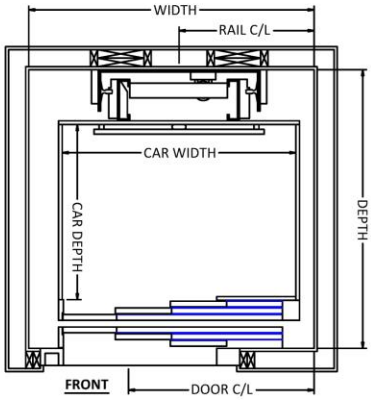

Car Size	Width	Depth	Rail C/L	Door C/L	Clear Front Opening
48x36	59	57-3/8	28-1/4	36	31-1/2
54x40	65	61-3/8	31-1/4	40	35-1/2
60x36	71	57-3/8	34-1/4	46	35-1/2

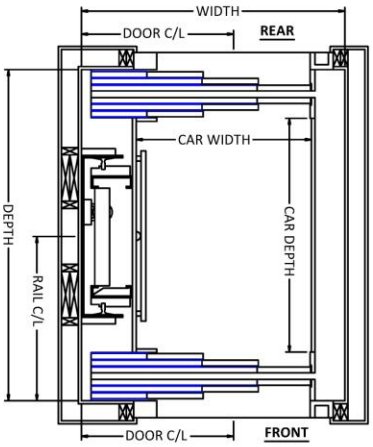

Car Size	Width	Depth	Rail C/L	Front Door C/L	Rear Door C/L	Clear Front Opening	Clear Rear Opening
36x48	54-1/2	67-1/4	33-5/8	31-1/2	31-1/2	31-1/2	31-1/2
36x60	54-1/2	79-1/4	39-5/8	31-1/2	31-1/2	31-1/2	31-1/2
40x54	58-1/2	73-1/4	36-5/8	33-1/2	33-1/2	35-1/2	35-1/2

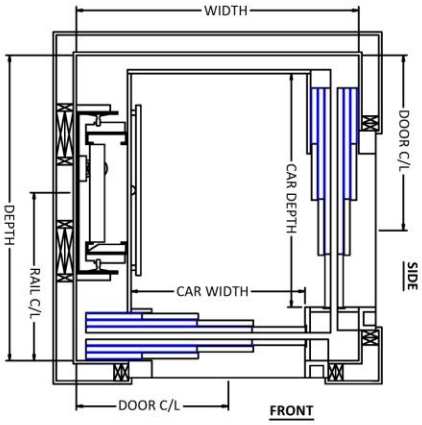

Car Size	Width	Depth	Rail C/L	Front Door C/L	Side Door C/L	Clear Front Opening	Clear Side Opening
36x48	57-7/8	61-3/8	31-5/8	32	36	31-1/2	31-1/2
36x60	57-7/8	73-3/8	37-5/8	32	46	31-1/2	35-1/2
40x54	61-7/8	67-3/8	34-5/8	36	40	31-1/2	35-1/2

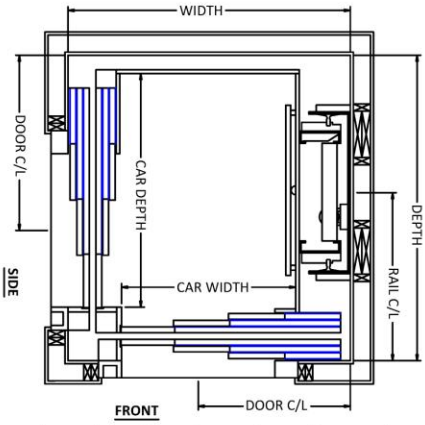

Car Size	Width	Depth	Rail C/L	Front Door C/L	Side Door C/L	Clear Front Opening	Clear Side Opening
36x48	57-7/8	61-3/8	31-5/8	32	36	31-1/2	31-1/2
36x60	57-7/8	73-3/8	37-5/8	32	46	31-1/2	35-1/2
40x54	61-7/8	67-3/8	34-5/8	36	40	31-1/2	35-1/2

ROCKY MOUNTAIN ELEVATOR PRODUCTS
LIVE LIFE ELEVATED

Hoistway Layouts

SRH-3SPVS STANDARD LAYOUTS & CAR SIZES WITH 3-SPEED CAR & SWING LANDING DOORS

Door Centerlines Represent 36" Swing Doors (Other Widths Available).

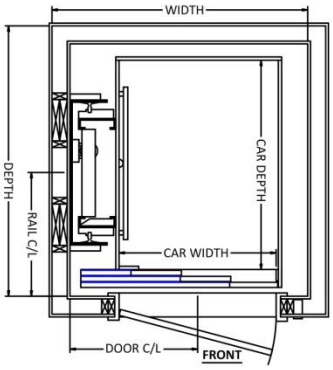

Model Name: SRH-3SPVSL,(SIZE),RL,FRONT,RH
(Left Gate Stack,Rail Left,Front Opening,Right Hand Door)

Car Size	Width	Depth	Rail C/L	Door C/L	Clear Front Opening
36x48	54-1/2	57-7/8	28-1/8	29-1/4	31-1/2
36x60	54-1/2	69-7/8	34-1/8	29-1/4	31-1/2
40x54	58-1/2	63-7/8	31-1/8	33-1/4	31-1/2

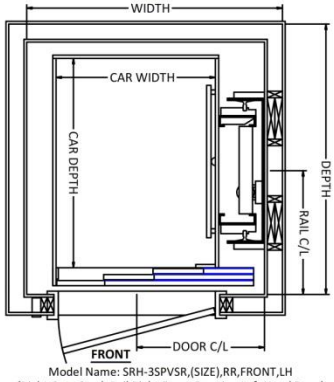

Model Name: SRH-3SPVSR,(SIZE),RR,FRONT,LH
(Right Gate Stack,Rail Right,Front Opening,Left Hand Door)

Car Size	Width	Depth	Rail C/L	Door C/L	Clear Front Opening
36x48	54-1/2	57-7/8	28-1/8	29-1/4	31-1/2
36x60	54-1/2	69-7/8	34-1/8	29-1/4	31-1/2
40x54	58-1/2	63-7/8	31-1/8	33-1/4	31-1/2

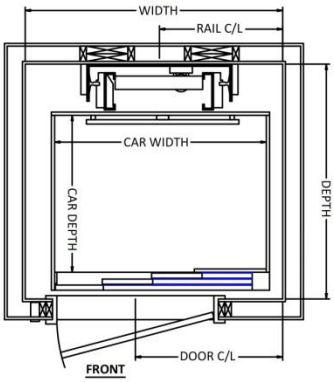

Model Name: SRH-3SPVSR,(SIZE),RF,FRONT,LH
(Right Gate Stack,Rail Front,Front Opening,Left Hand Door)

Car Size	Width	Depth	Rail C/L	Door C/L	Clear Front Opening
48x36	59	53-7/8	28-1/4	33-3/4	35-1/2
54x40	65	57-7/8	31-1/4	39-3/4	35-1/2
60x36	71	53-7/8	34-1/4	45-3/4	35-1/2

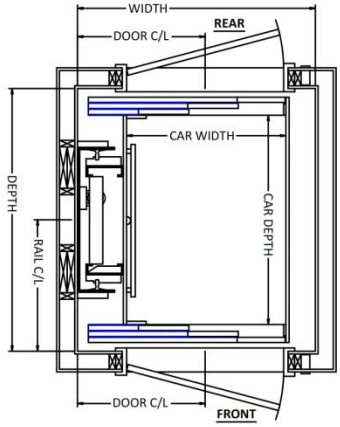

Model Name: SRH-3SPVSLR,(SIZE),RL,FRONT-REAR,RH-LH
(Left Front Gate Stack & Right Rear Gate Stack,Rail Left,Front & Rear Openings,Front Right Hand Door & Rear Left Hand Door)

Car Size	Width	Depth	Rail C/L	Front Door C/L	Rear Door C/L	Clear Front Opening	Clear Rear Opening
36x48	54-1/2	60-1/4	30-1/8	29-1/4	29-1/4	31-1/2	31-1/2
36x60	54-1/2	72-1/4	36-1/8	29-1/4	29-1/4	31-1/2	31-1/2
40x54	58-1/2	66-1/4	33-1/8	33-1/4	33-1/4	35-1/2	35-1/2

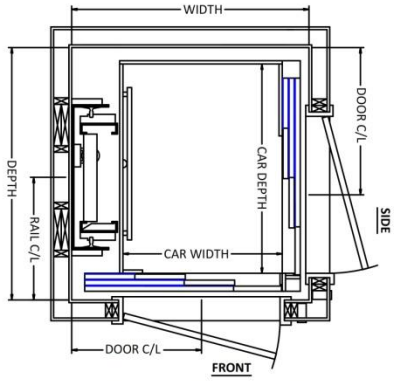

Model Name: SRH-3SPVSLR,(SIZE),RL,FRONT-SIDE,RH-LH
(Left Front Gate Stack & Right Side Gate Stack,Rail Left,Front & Side Openings,Front Right Hand Door & Side Left Hand Door)

Car Size	Width	Depth	Rail C/L	Front Door C/L	Side Door C/L	Clear Front Opening	Clear Side Opening
36x48	54-3/8	57-7/8	28-1/8	29-3/4	33-3/4	31-1/2	31-1/2
36x60	54-3/8	69-7/8	34-1/8	29-3/4	45-3/4	31-1/2	35-1/2
40x54	58-3/8	63-7/8	31-1/8	33-3/4	39-3/4	31-1/2	35-1/2

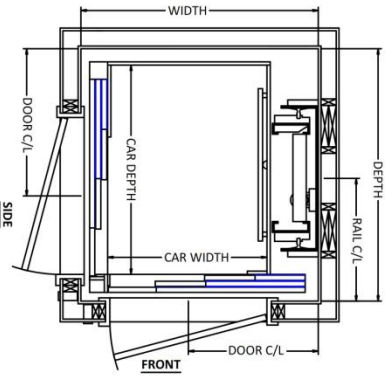

Model Name: SRH-3SPVSRL,(SIZE),RR,FRONT-SIDE,LH-RH
(Right Front Gate Stack & Left Side Gate Stack,Rail Right,Front & Side Openings,Front Left Hand Door & Side Right Hand Door)

Car Size	Width	Depth	Rail C/L	Front Door C/L	Side Door C/L	Clear Front Opening	Clear Side Opening
36x48	54-3/8	57-7/8	28-1/8	29-3/4	33-3/4	31-1/2	31-1/2
36x60	54-3/8	69-7/8	34-1/8	29-3/4	45-3/4	31-1/2	35-1/2
40x54	58-3/8	63-7/8	31-1/8	33-3/4	39-3/4	31-1/2	35-1/2

ROCKY MOUNTAIN ELEVATOR PRODUCTS
LIVE LIFE ELEVATED

Work by Others

Delivery

1. Provide smooth (roll-able) access as close as possible to the installation area.

Hoistway

1. Hoistway wall must be framed on each level as per site-specific equipment shop drawings, not architectural drawings. (All dimensions are to finished wall)
2. Hoistway must be plumb and square within ¼".
3. Hoistway doors must be installed on all floors/landings as per site-specific shop drawings.
4. Casing trim inside hoistway cannot protrude more than ¾" from wall.
5. Drywall and taping must be complete by time of install.
6. No other pipes, wires, liquids, gases, etc. are allowed in hoistway by code.
7. Hoistway temperature must be maintained within 60 to 100 degrees Fahrenheit.
8. Contractor will furnish appropriate rail backing for T-Rail.
9. Rail backing wall must be a load-bearing wall.
10. Consult Dealer for span greater than 10' between floor joists.
11. Maintain below 1/8" tolerances throughout hoistway.
12. The structure of the hoistway must allow for installation of a chain hoist to transfer materials to the upper landings during elevator installation (Eye bolt of 1,000 lb. capacity).
13. 8'0" minimum hoistway overhead above the finished floor at the top landings required for 7'0" car with remote controller.
14. Provide an access hatch for servicing the controller/drive unit.

Doors

1. Doorways must be framed with 2x4 construction for proper clearances by codes (reference shop drawings and/or hoistway door detail).
2. Doors must be a solid core (or equivalent) 20 minute minimum fire rating unless serving a garage, then a 1 hour fire rating is required.
3. The doors, hardware and closers (spring loaded hinges) are to be supplied and installed prior to installation.
4. When closed, the landing doors/jambs must leave only 3" of threshold space from inside of hoistway to the backside of the door to allow proper spacing for the hoistway door interlocks, and to meet code (reference shop drawings and/or hoistway door detail).
5. Door openings must be laid out and framed per elevator shop drawings, not architectural drawings.

Pit

1. Pit must be poured to proper depth and size (reference shop drawings).
2. A clean, dry pit must be maintained.
3. Pit floor must be a minimum of 8" (10" preferred) below the finished floor of the lowest landing.
4. Construction of pit floor must withstand an impact load of 4,700 lbs.

Machine Room/Equipment Room

1. Elevator Equipment must be within 40' of hoistway.
2. Must have a minimum of 3'0" clear area in front of controller as per electrical code.
3. Permanent telephone line to controller. Telephone must be live before inspection.
4. Machine room temperature must be maintained within 60-100 degrees Fahrenheit.
5. 230V 30Amp Single Phase service whip needs to be ran to Controller.
6. 120V 15Amp Single Phase dedicated car light service whip needs to be ran to Controller.

Cab and Finish

1. All cab choices and any materials being supplied for finishes of this elevator must be provided a minimum of 10 weeks prior to the installation of the elevator.

Safety

1. Hoistway doors or OSHA approved removable barricades must be installed and secured.

Storage

1. A dry, clean and secure area needs to be provided for the elevator equipment not installed at time of delivery.

Acceptance/Final Inspection

1. The elevator phone with dial tone must be present prior to inspection.
2. Cab interior, door hardware, door trim and door finishes must be complete prior to inspection.
3. The elevator cannot be turned over and/or used for construction until it has passed final inspection.

Contact Information

For more information please contact us.

Phone: (970) 242-2554

Mail: Sales at RMEP
416 29 Road
Grand Junction, CO 81504

www.RockyMountainElevatorProducts.com